

CIT Relay & Switch DL

RoHS COMPLIANT

Horizontal Pushbutton

Specifications

Electrical Ratings	See Contact Options
Electrical Life	100,000 cycles typical
Contact Resistance	<50mΩ initial @ 2-4VDC, 100mA
Dielectric Strength	2000Vrms min
Insulation Resistance	>100MΩ min

Operating Force	2 Pole: 350 ± 100gF
	4 Pole: 450 ± 100gF
	6 Pole: 550 ± 100gF
	8~10 Pole: 650 ± 150gF
Operating Temperature	-20ºC to 70ºC
Storage Temperature	-40ºC to 85ºC

Materials

Actuator	POM
Housing	PC
Terminal Base	Phenolic
Contacts	Phosphor Bronze, Silver or Gold-Nickel Plated
Terminals	Brass, Silver or Gold-Nickel Plated
Chassis	Steel
Spring	Steel
Latching Pin	Steel

Ordering Information

1. Series	DL	4		N	F	B	Q	C132

DL

2. Number of Poles
   2 = DPDT
   4 = 4PDT
   6 = 6PDT
   8 = 8PDT
   10 = 10PDT
   **Stacking switch part numbers are:
   DL2LAQ/4LAQ
   DL2LAQ/6LAQ

3. Actuation Force Options
   None = Standard Force

4. Switch Function
   N = Non-latching
   L = Latching

5. Terminal Options
   A, F, E, C, G

6. Mounting Options
   Blank = No Chassis (standard)
   B = Mounting Chassis, single stage, 3.2mm dia mounting holes
   C = Mounting Chassis, single stage, M3x0.5 threaded mounting holes
   ***Multi-Stage switch assembly part numbers assigned at factory*

7. Contact Material
   Q = Silver
   R = Gold

6. Caps

Blank = No Cap	C31	Cap Colors
C11	C32	**See Cap Options for color availability
C12	C33	
C13	C34	

Dimensions

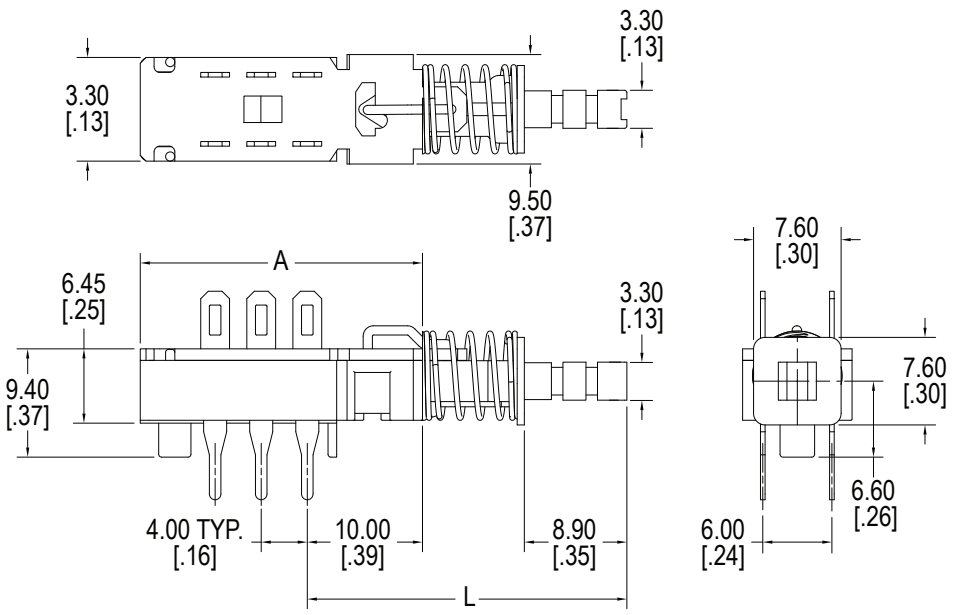

Number of Poles	"A" mm
2	24.5
4	36.5
6	48.5
8	60.5
10	72.5

Free Position	L = 27.75 ± .15mm
Locking Position	L = 24.55 ± .15mm
Total Travel	4.70 ± .15mm
Total Travel to Lock Position	1.5 ± .15mm

Stacking Switches

DL2LAQ/4LAQ

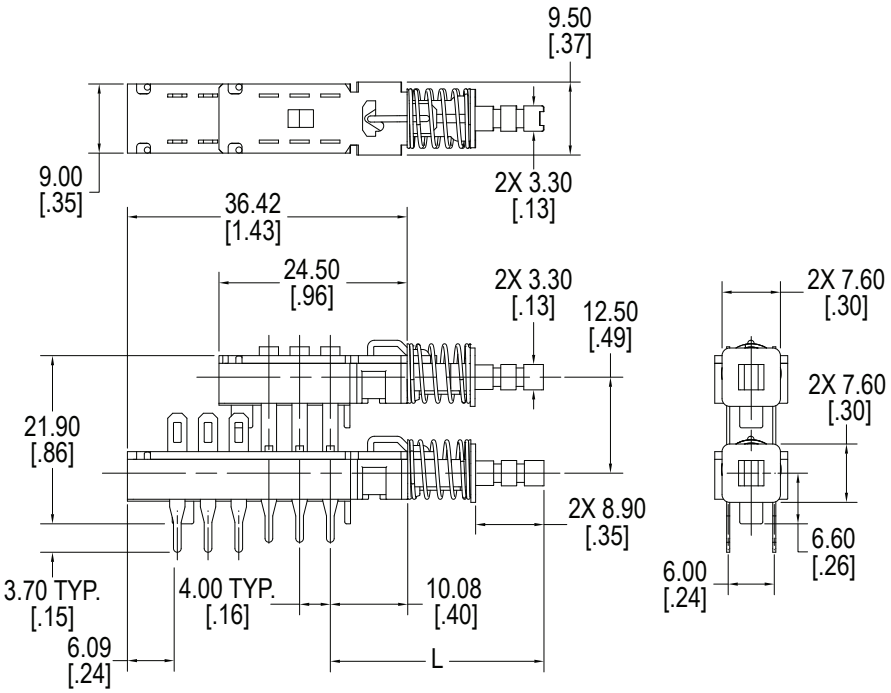

Stacking Switches

DL2LAQ/6LAQ

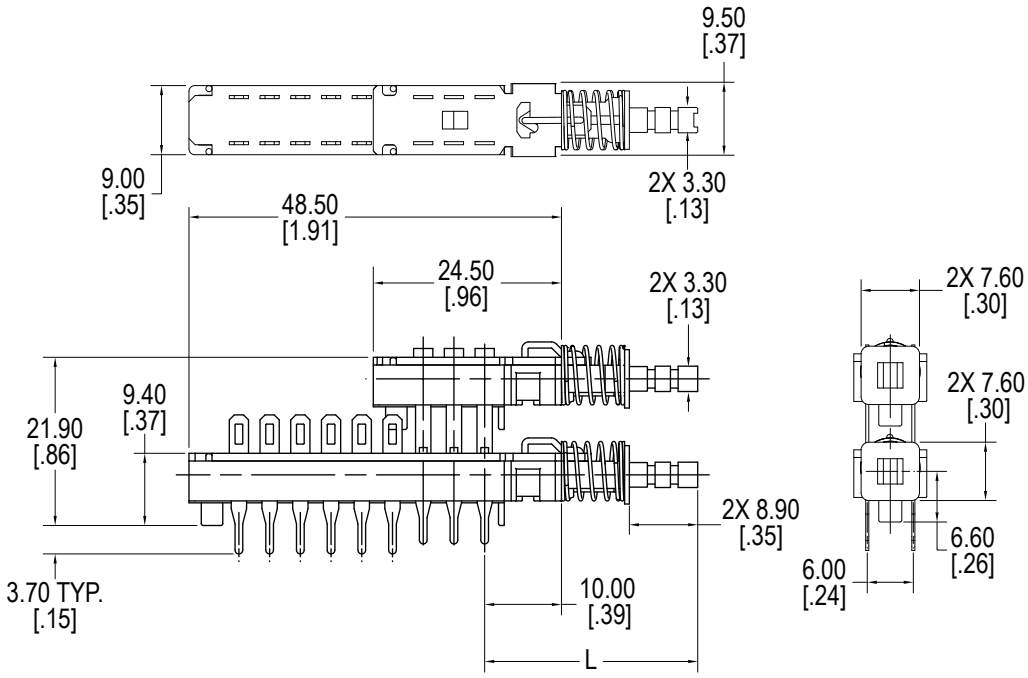

Mounting Options

B, 3.2mm mounting holes

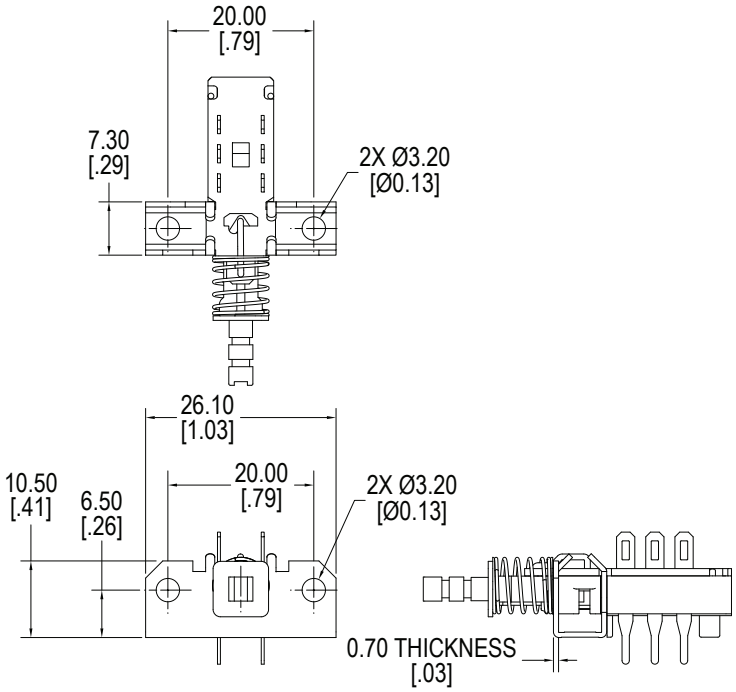

C, M3x0.5 mounting holes

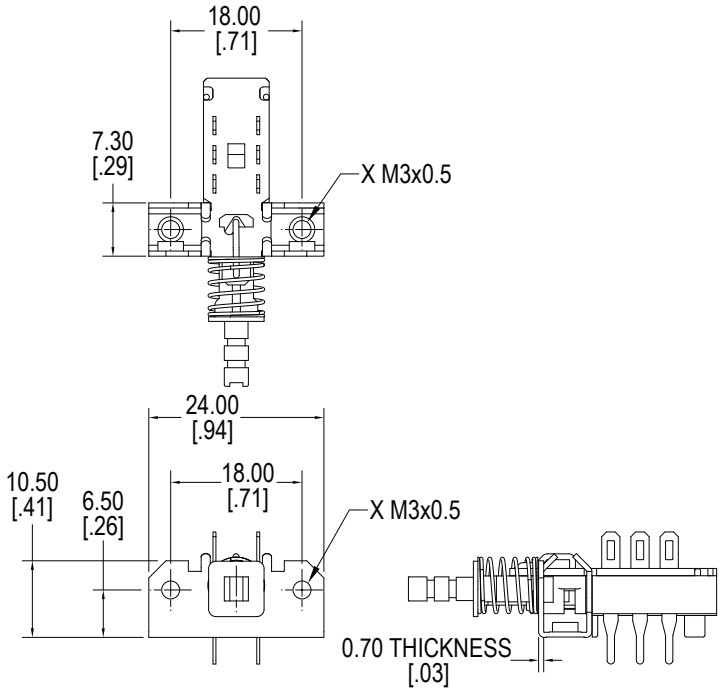

Schematics & PCB Layout

2 Pole

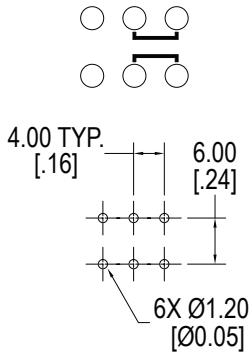

4 Pole

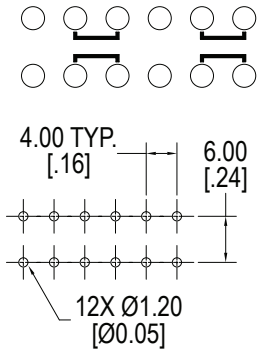

6 Pole

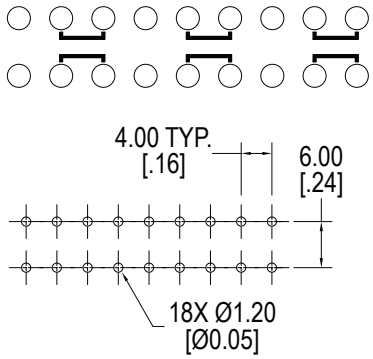

8 Pole

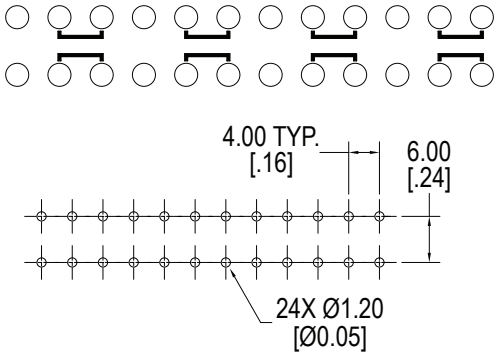

10 Pole

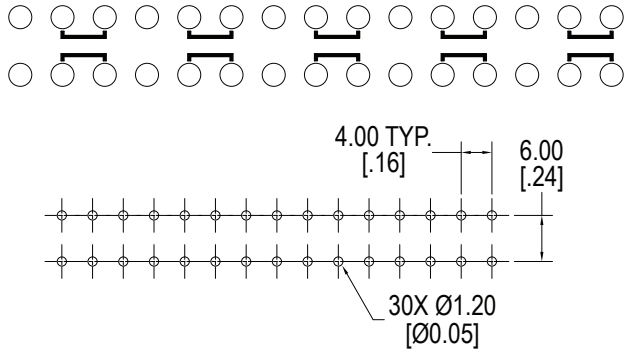

Terminal Options

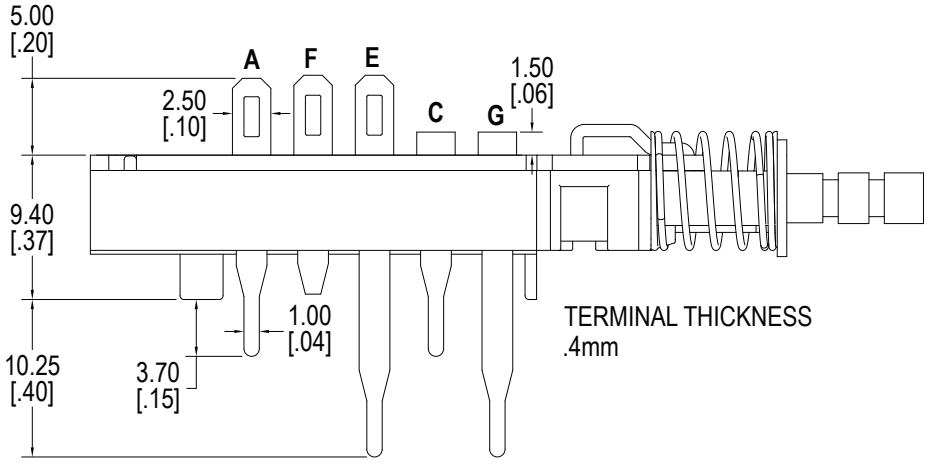

Contact Options

Designator	Contact Material	Terminal Material	Electrical Ratings
Q	Silver Plating	Silver Plating	500mA @ 120VAC, 1A @ 28VDC
R	Gold over Nickel Plating	Gold over Nickel Plating	0.4VA max @ 20VAC or VDC max

Multi-Stage Chassis

Part Numbers assigned at the factory

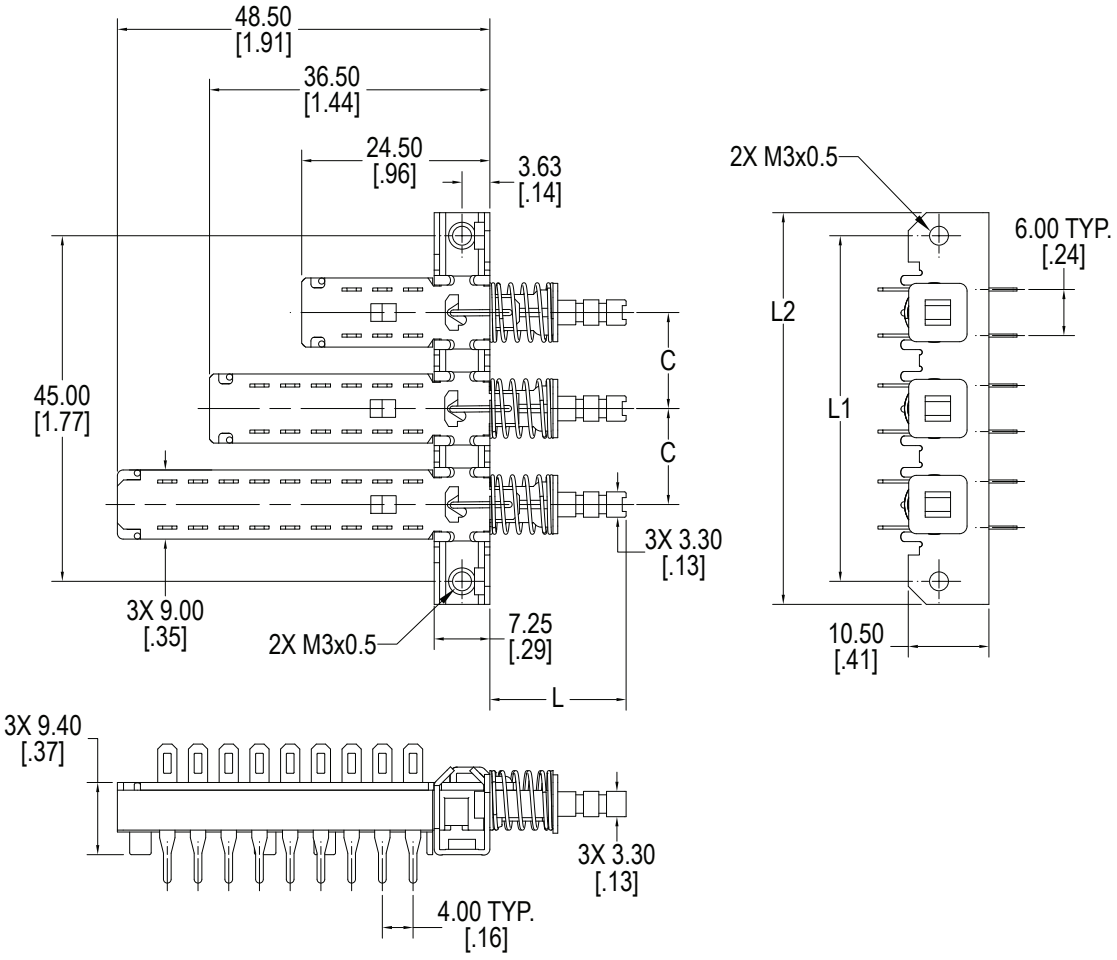

Bracket Length & Mounting Pitch

Pitch (C)	Number of Positions											
	1		2		3		4		5		6	
	L1	L2	L1	L2	L1	L2	L1	L2	L1	L2	L1	L2
10mm	18	24	30	36	40	46	50	56	60	66	70	76
12.5mm			32.5	38.5	45	51	57.5	63.5	70	76	82.5	88.5
15mm			35	41	50	56	65	71	80	86	95	101
17.5mm			37.5	43.5	55	61	72.5	78.5	90	96	107.5	113.5
20mm			40	46	60	66	80	86	100	106	120	126
25mm			45	51	70	76	95	101	120	126	145	151
30mm			50	56	80	86	110	116	140	146	170	176

Cap Options Contact Factory for other available colors

C11_



1 = White
2 = Black
3 = Red
9 = Light Gray

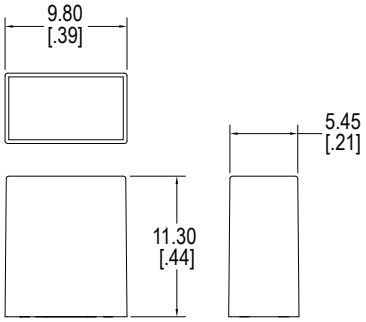

C12_



1 = White
2 = Black
3 = Red
9 = Light Gray

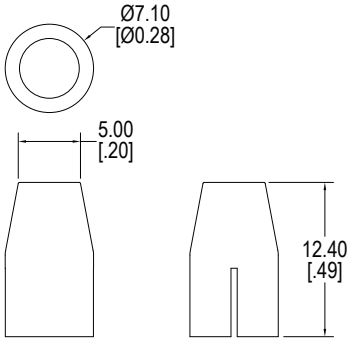

C13_



1 = White
2 = Black
3 = Red
9 = Light Gray

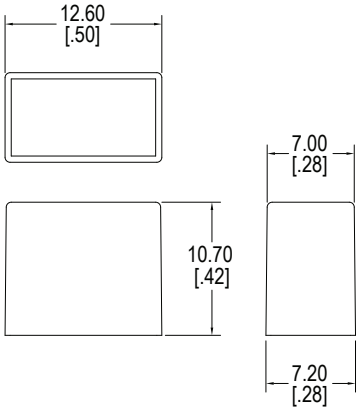

C31_



2 = Black
3 = Red
contact factory for additional colors

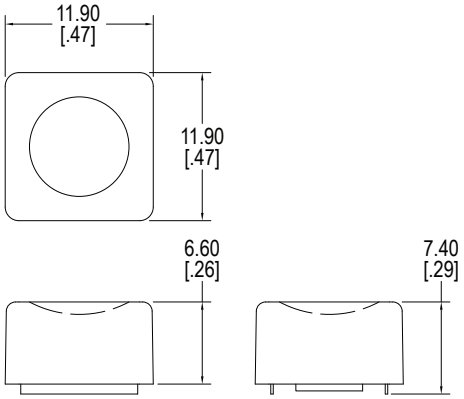

C32_



2 = Black
3 = Red
contact factory for additional colors

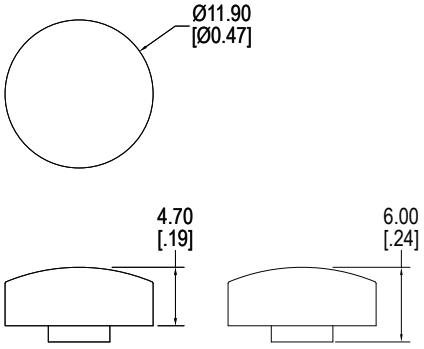

C33_



2 = Black
3 = Red
contact factory for additional colors

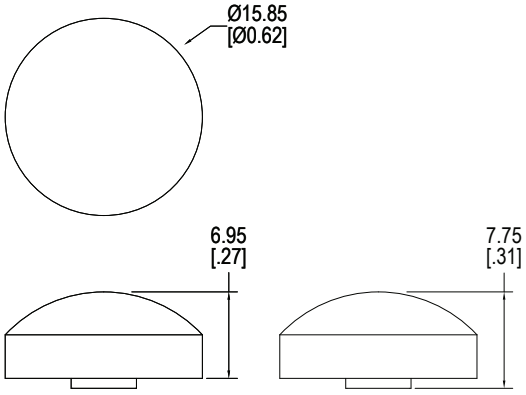

C34_



2 = Black
3 = Red
contact factory for additional colors

