

RoHS COMPLIANT

CIT Relay & Switch

LP2203

Miniature Pushbutton

Specifications

Electrical Ratings	100mA @ 30VDC
Electrical Life	100,000 cycles typical
Contact Resistance	<50mΩ initial
Actuation Force	180 ± 50gF
Actuator Travel	1.5mm to lock 2.5mm to full travel

Dielectric Strength	1000Vrms min
Insulation Resistance	>100MΩ min
Operating Temperature	-40ºC to 85ºC
Storage Temperature	-40ºC to 85ºC

Materials

Actuator	Acetal
Housing	PBT
Cover	Acetal
Latching Pin	Stainless Steel
Spring	Stainless Steel
Contacts	Phosphor Bronze, Silver Plated
Terminals	Brass, Silver Plated

Ordering Information

1. Series	LP2203	F180	N	Z	A

LP2203

2. Actuation Force
F180 = F180gF

3. Latching
N = Non-Latching
* Contact Factory for Latching Option

4. Actuation Options
X = 2mm x 3mm head
Y = 3.3mm square head
Z = 2.8mm square head

5. Temination
A = PC Pins, straight
E = PC Pins with bend

6. Cap Options

Blank = No Cap	C13	C31	Cap Colors:
C01	C15	C32	See Cap Options for color availability
C02	C16	C33	Caps available with Y & Z actuators only
C03	C17	C34	
C04	C18		
C05	C19		
C11	C22		
C12	C26		

Dimensions

X, 2mm x 3mm

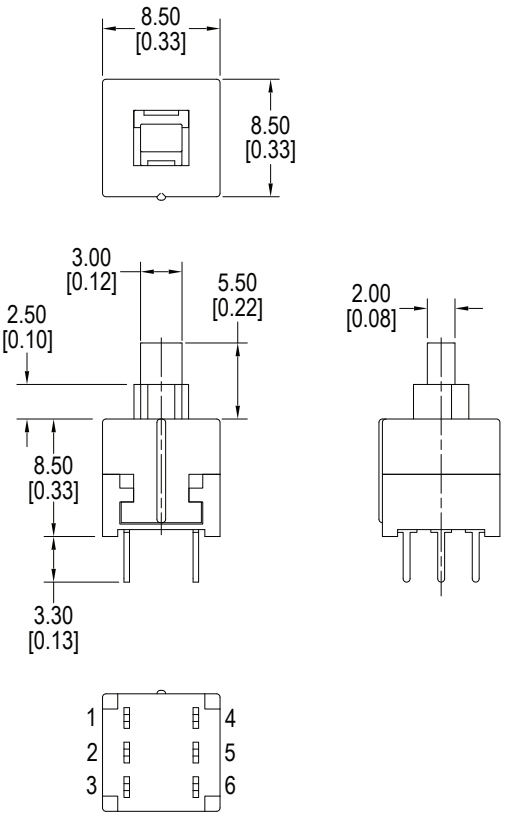

Y, 3.3mm square

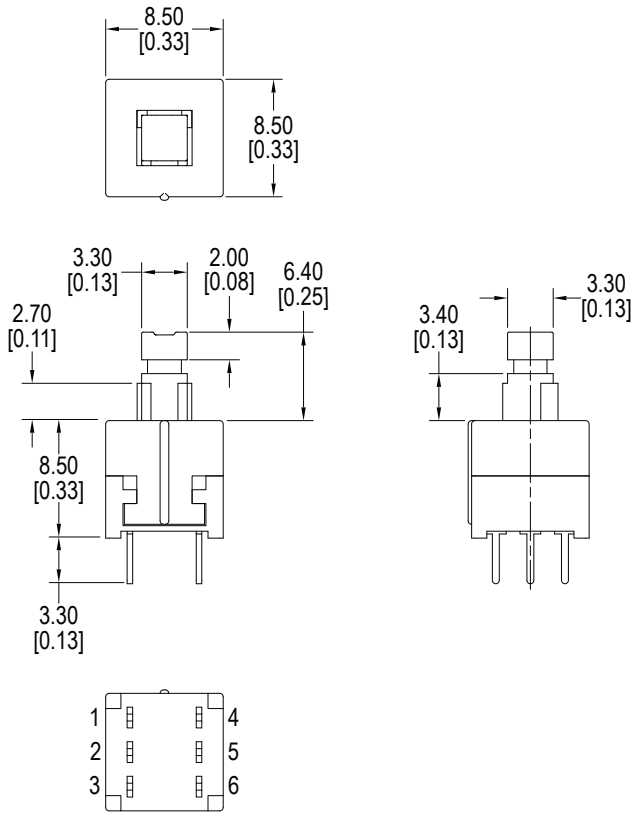

Dimensions

Z, 2.8mm square

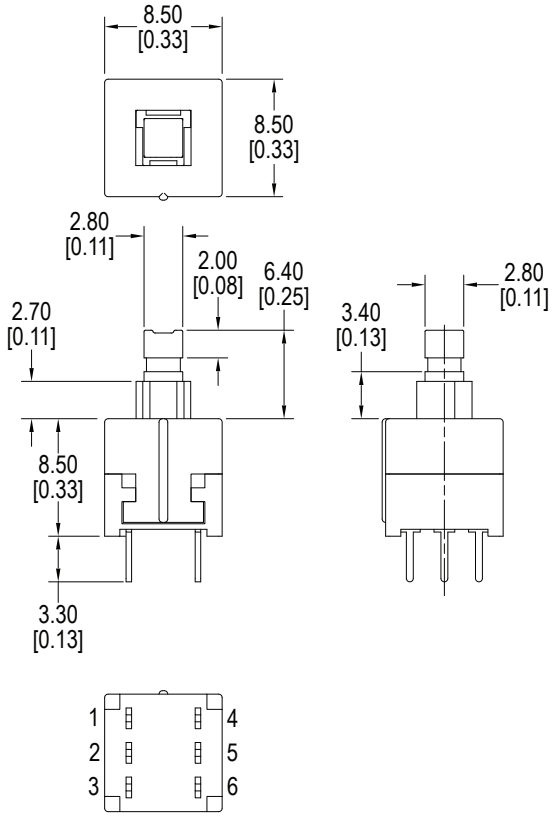

Schematic & PC Layout

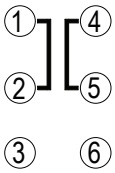

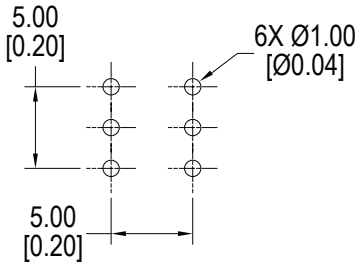

Termination

A, Straight PC Pins

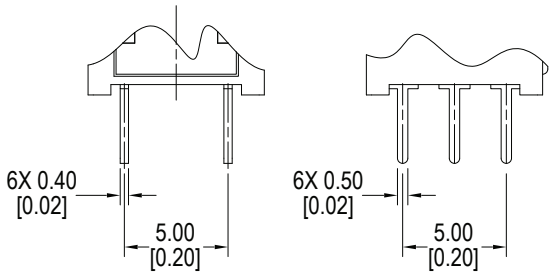

E, PC Pins with Bend

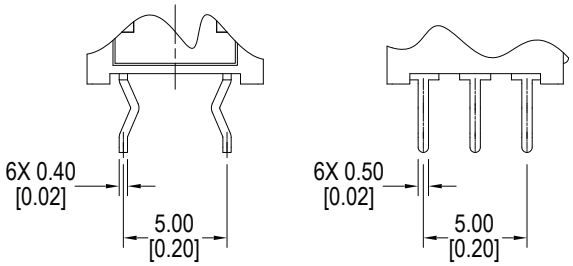

Cap Options for Z Actuator Contact Factory for other available colors

C01_



1 = White
2 = Black
3 = Red
9 = Light Gray

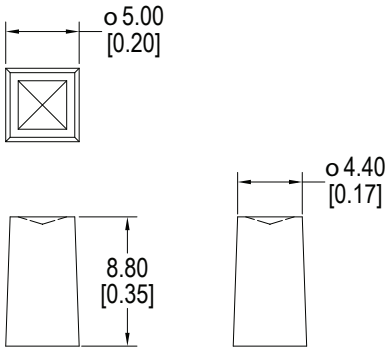

C02_



1 = White
2 = Black
3 = Red
9 = Light Gray

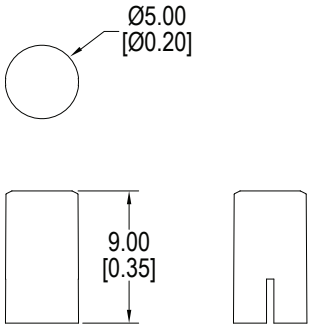

C03_



1 = White
2 = Black
3 = Red
9 = Light Gray

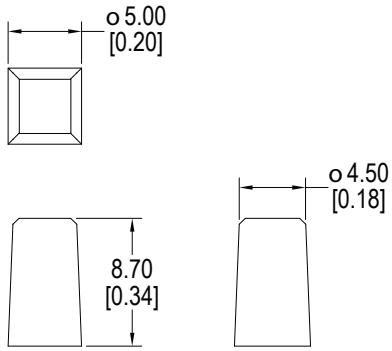

Cap Options for Z Actuator Contact Factory for other available colors

C04_



1 = White
2 = Black
3 = Red
9 = Light Gray

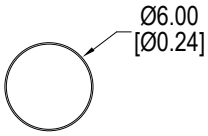

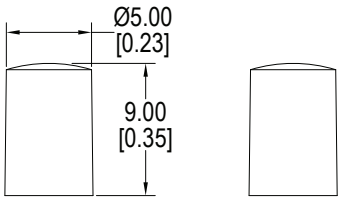

C05_



1 = White
2 = Black
3 = Red
9 = Light Gray

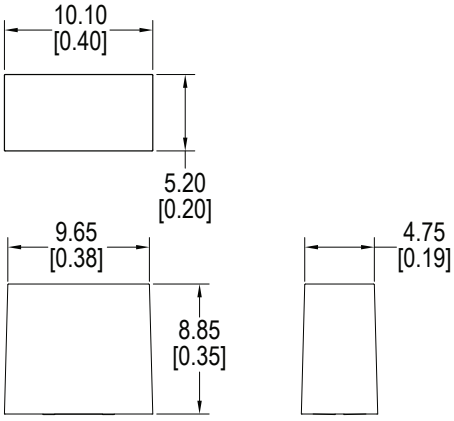

Cap Options for Y Actuator Contact Factory for other available colors

C11_



1 = White
2 = Black
3 = Red
9 = Light Gray

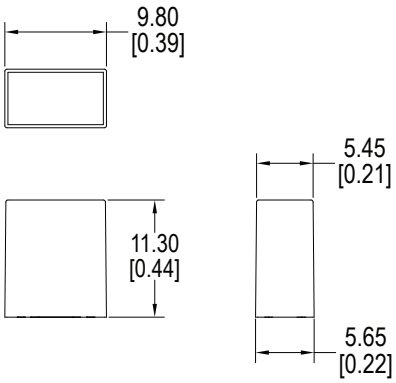

C12_



1 = White
2 = Black
3 = Red
9 = Light Gray

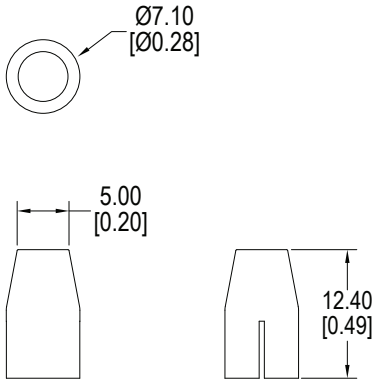

C13



1 = White
2 = Black
3 = Red
9 = Light Gray

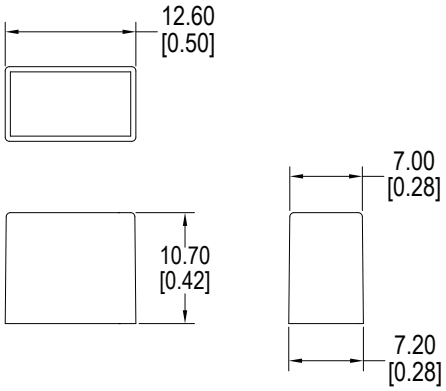

Cap Options for Y Actuator Contact Factory for other available colors

C15_

2 = Black
0 = Clear



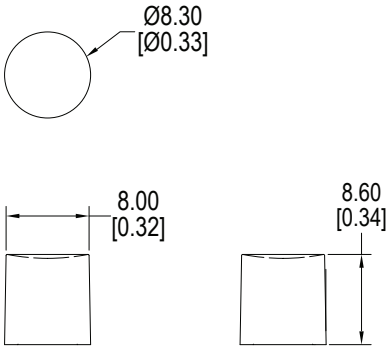

C16_

1 = White
2 = Black
3 = Red
7 = Blue

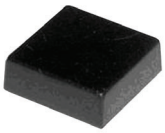

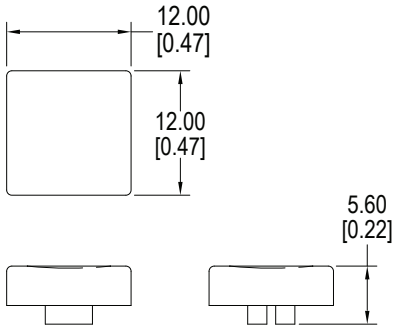

C17_

1 = White
2 = Black
9 = Light Gray



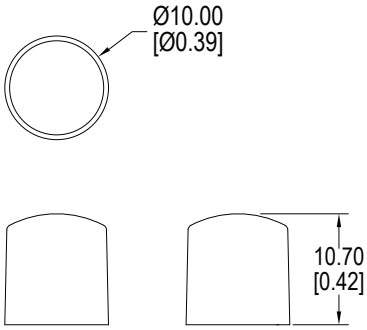

C18_

1 = White
2 = Black
9 = Light Gray



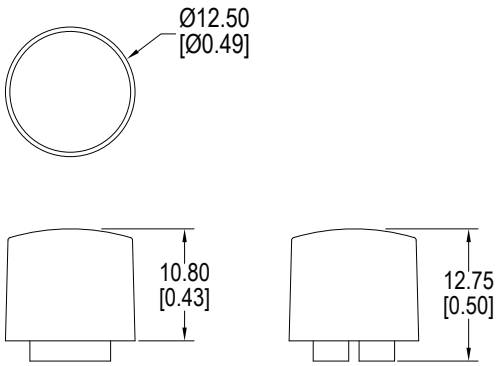

C19_

1 = White
2 = Black
9 = Light Gray

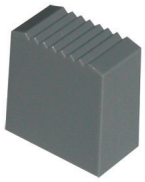

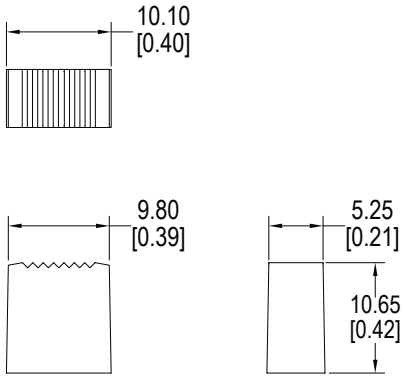

C22_

2 = Black
8 = Dark Gray
9 = Light Gray



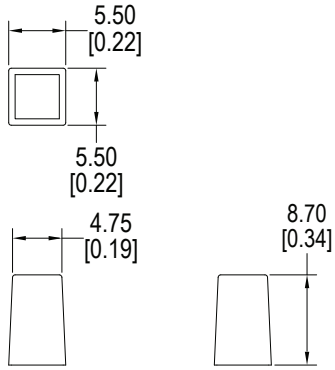

Cap Options for Y Actuator Contact Factory for other available colors

C26_



1 = White
2 = Black
3 = Red
9 = Light Gray

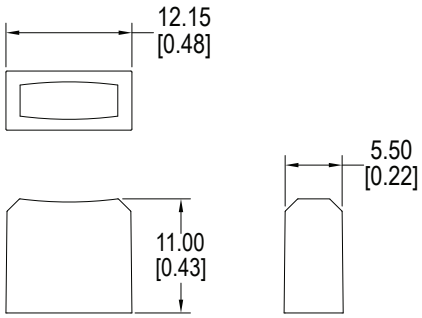

C31_



2 = Black
3 = Red

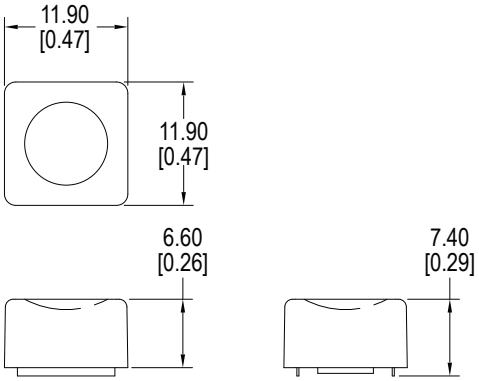

C32_



2 = Black
3 = Red

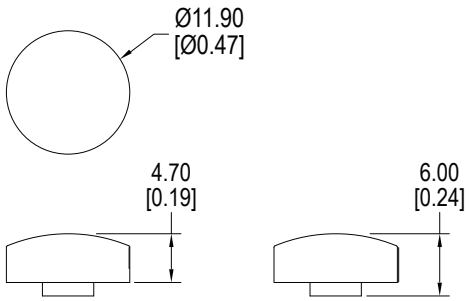

C33_



2 = Black
3 = Red

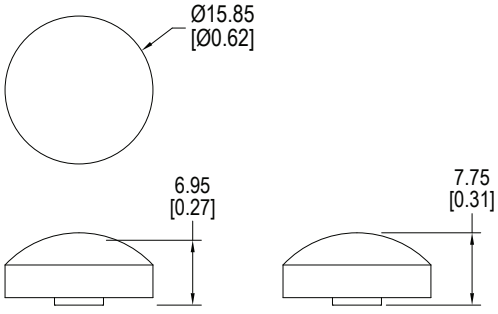

C34_



2 = Black
3 = Red

